PUBLISHED: 21-NOV-2016
2022.0 DEFENDER (LE), 307-02

TRANSMISSION/TRANSAXLE COOLING - VEHICLES WITH: 8HP70 8-SPEED AUTOMATIC TRANSMISSION AWD

DESCRIPTION AND OPERATION

transmissionmanuals.com

COMPONENT LOCATION

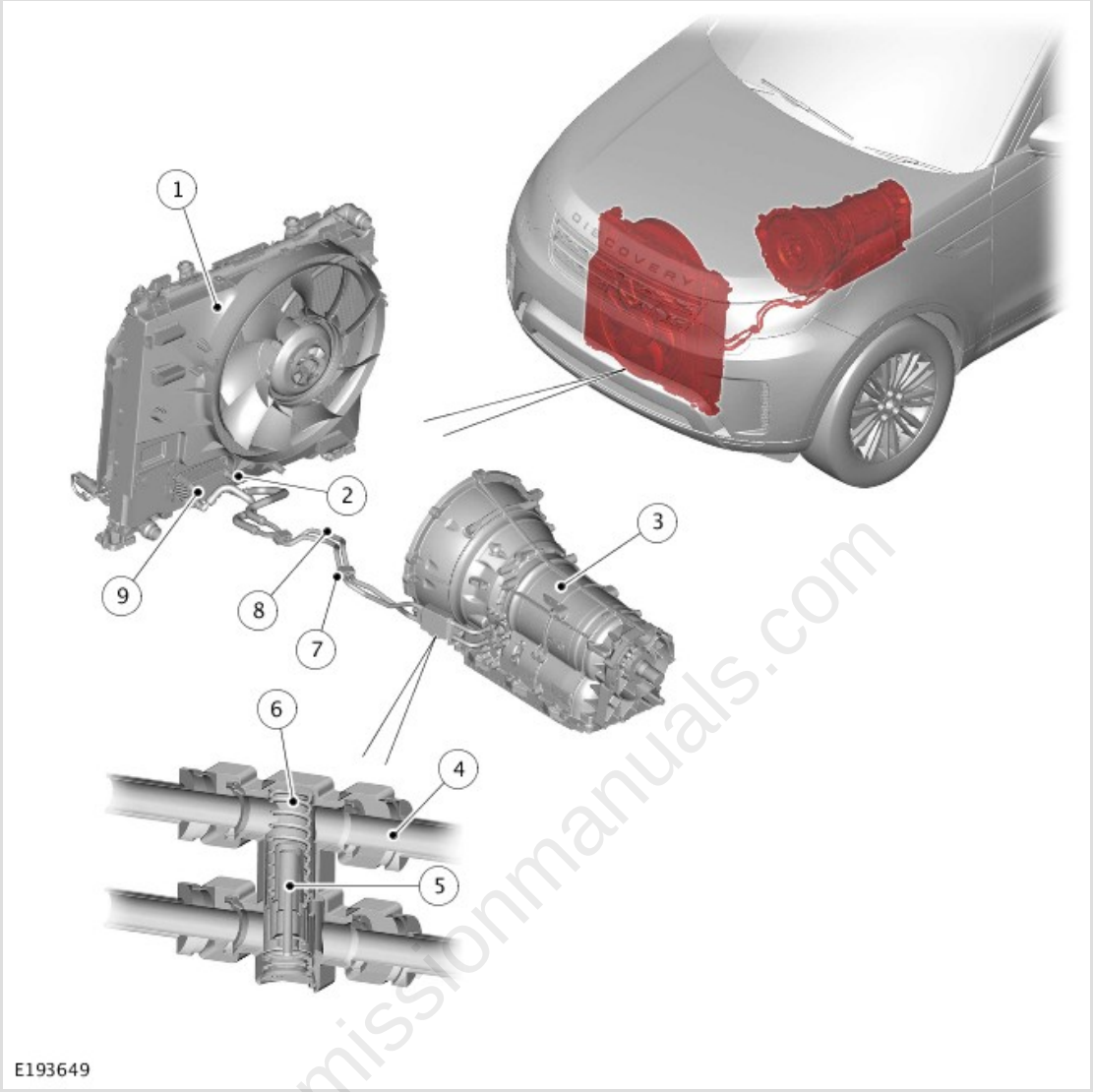

transmissionmanuals.com

ITEM	DESCRIPTION
1	Engine cooling radiator
2	Automatic Transmission Fluid (ATF) cooler - Engine coolant inlet
3	Automatic Transmission (AT)
4	Thermostatic valve body
5	Thermostatic wax element
6	Spring
7	Supply pipe - from transmission
8	Return pipe - to transmission
9	Automatic Transmission Fluid (ATF) cooler - Engine coolant outlet

OVERVIEW

Transmission cooling is provided by a Automatic Transmission fluid (ATF) cooler, which transfers heat from the transmission to the engine cooling system.

The ATF cooler is a separate cooling unit located behind the engine cooling radiator. The unit is attached to the rear of the cooling fan shroud. The transmission is connected to the ATF cooler via flexible hoses and metal pipes.

The ATF cooler is a dedicated cooler which is connected into the engine cooling system circuit. The ATF is cooled by the temperature differential between the ATF and the engine coolant flowing through the ATF cooler.
For additional information, refer to: Engine Cooling (303-03A, Description and Operation) /
Engine Cooling (303-03D, Description and Operation).

DESCRIPTION

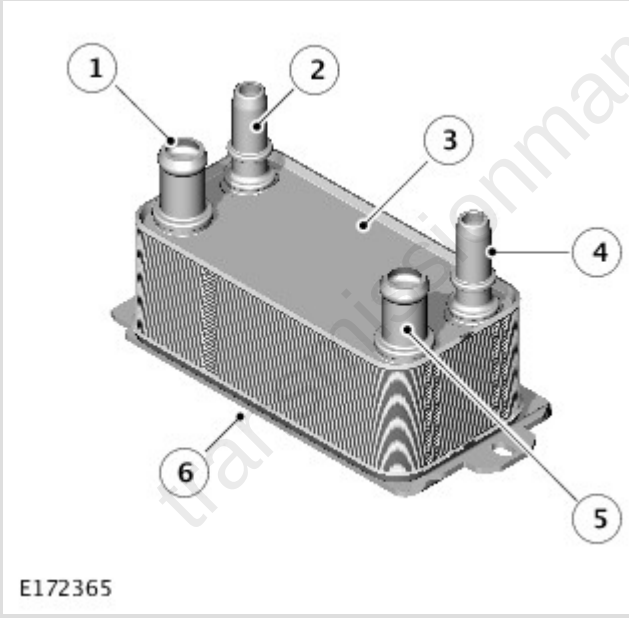

ITEM	DESCRIPTION
1	Engine coolant outlet
2	Transmission fluid pipe inlet connection
3	Automatic Transmission Fluid (ATF) cooler
4	Transmission fluid pipe outlet connection
5	Engine coolant inlet
6	Mounting bracket

The Automatic Transmission Fluid (ATF) cooler has two lugs which locate in corresponding lugs on the mounting bracket and secured with a screw. The fluid cooler is an aluminum housing comprising louvred fins and plates. The plates allow a cross-flow of ATF and engine coolant through the cooler.

The plates are immersed in engine coolant from the 'cold' side of the radiator which provides cooling of the ATF by the temperature differential between the ATF and the engine coolant. The ATF cooler receives engine coolant from the low temperature zone at the top third of the radiator. The engine coolant flow through this section of the radiator is restricted by the ATF cooler. Therefore the engine coolant has a slower flow rate across the cooling tubes of this section of the radiator. This cools the engine coolant more than the lower part of the radiator and consequently provides increased cooling of the ATF. The coolant then passes from the ATF fluid cooler into the radiator bottom hose.

Two quick release connectors on the cooler provide for the attachment of the ATF pipes to and from the Automatic Transmission (AT). The ATF is supplied from the ATF pump into the lower connection of the cooler. After passing through the cooler, the fluid passes out of the upper connection and is returned to ATF pan.

transmissionmanuals.com

OPERATION

Automatic Transmission Fluid (ATF) from the pump in the AT flows through the feed hose and pipe to the ATF cooler. The ATF then flows through the ATF cooler, and the return hose and pipe, to the fluid pan of the AT. On vehicles with a thermostatic valve, ATF flow is only permitted when the thermostatic valve is open.

ATF is supplied from the transmission ATF pump, through a thermostatic valve (if open) into the ATF cooler. After passing through the ATF cooler, the ATF passes out of the ATF cooler and is returned, via the thermostatic valve body, to the transmission fluid pan. The thermostatic valve is located in the transmission cooler fluid supply and return lines. The valve contains a thermostatic wax element which is closed when transmission fluid temperatures are below 69 º C (156.2 º F). At temperatures of 69 º C (156.2 º F) and above, the thermostatic valve begins to open allowing the fluid to flow through the ATF cooler. The thermostatic valve is fully open at temperatures of 79 º C (174.2 º F)